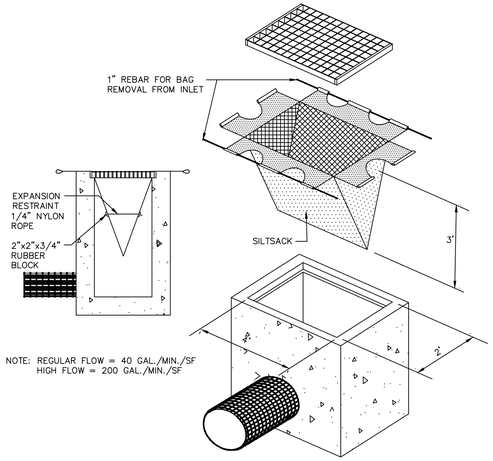

SILTSACK DETAIL

N.T.S. BLEC-005

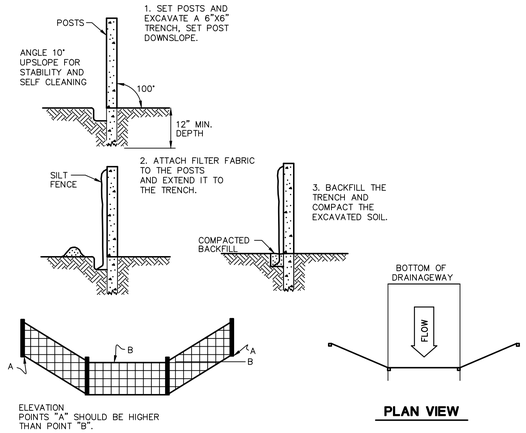

SILT FENCE

N.T.S. CTEC-003

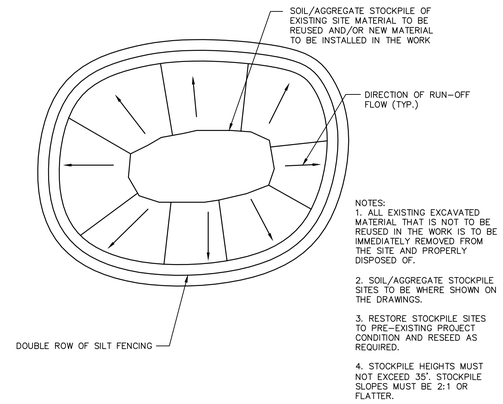

NOTES:

1. ALL EXISTING EXCAVATED MATERIAL THAT IS NOT TO BE REUSED IN THE WORK IS TO BE IMMEDIATELY REMOVED FROM THE SITE AND PROPERLY DISPOSED OF.

2. SOIL/AGGREGATE STOCKPILE SITES TO BE WHERE SHOWN ON THE DRAWINGS.

3. RESTORE STOCKPILE SITES TO PRE-EXISTING PROJECT CONDITION AND RESEED AS REQUIRED.

4. STOCKPILE HEIGHTS MUST NOT EXCEED 35'. STOCKPILE SLOPES MUST BE 2:1 OR FLATTER.

MATERIALS STOCKPILE DETAIL

N.T.S. BLEC-006

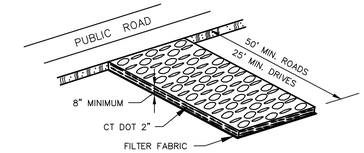

CONSTRUCTION ENTRANCE

N.T.S. CTEC-001

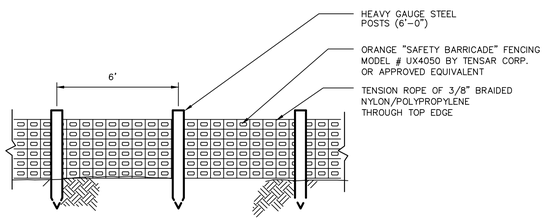

CONSTRUCTION SAFETY FENCE DETAIL

N.T.S. BLFD-003

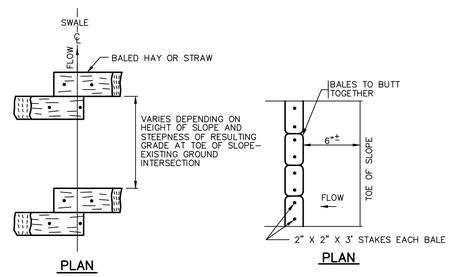

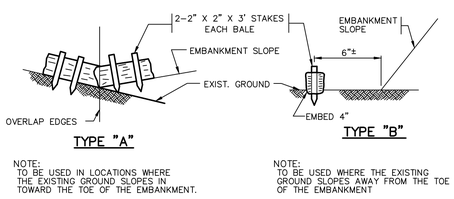

NOTE:
TO BE USED IN LOCATIONS WHERE THE EXISTING GROUND SLOPES IN TOWARD THE TOE OF THE EMBANKMENT.

NOTE:
TO BE USED WHERE THE EXISTING GROUND SLOPES AWAY FROM THE TOE OF THE EMBANKMENT

BALED HAY OR STRAW EROSION CHECKS

N.T.S. ZEC-013

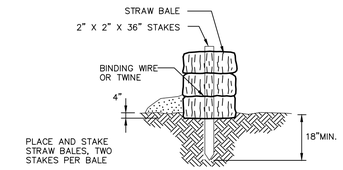

STRAW BALE BARRIERS SHOULD NOT BE USED FOR MORE THAN 3 MONTHS

SEDIMENT MUST BE REMOVED WHEN ACCUMULATIONS REACH 1/3 THE ABOVE GROUND HEIGHT OF THE BARRIER.

ANY SECTION OF STRAW BALE BARRIER WHICH HAS BEEN UNDERMINED OR TOPPED MUST BE IMMEDIATELY REPLACED WITH A ROCK FILTER OUTLET.

HAY OR STRAW BALE DETAIL

N.T.S. BLEC-007

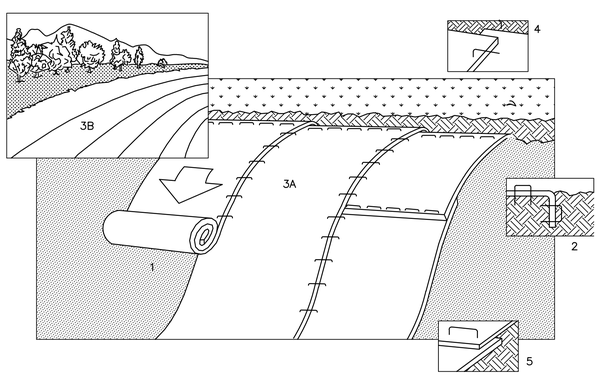

1. PREPARE SOIL BEFORE INSTALLING BLANKETS, INCLUDING APPLICATION OF LIME, FERTILIZER,AND SEED.

2. BEGIN AT THE TOP OF THE SLOPE BY ANCHORING THE BLANKET IN 6" DEEP X 6" WIDE TRENCH. BACKFILL AND COMPACT THE TRENCH AFTER STAPLING.

3. ROLL THE BLANKETS (A.) DOWN OR (B.) HORIZONTALLY ACROSS THE SLOPE.

4. THE EDGES OF PARALLEL BLANKETS MUST BE STAPLED WITH APPROXIMATELY 2" OVERLAP.

5. WHEN BLANKETS MUST BE SPLICED DOWN THE SLOPE, PLACE BLANKETS END OVER END (SHINGLE STYLE) WITH APPROXIMATELY 4" OVERLAP. STAPLE THROUGH OVERLAPPED AREA, APPROXIMATELY 12" APART.

EROSION CONTROL BLANKET

N.T.S. BLEC-010

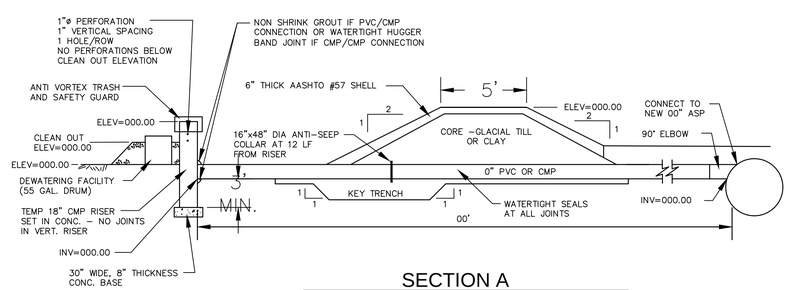

SECTION A

NOTE:

CLEAN OUT STAKES MUST BE PLACED AT HALF DISTANCES FROM POINT OF CONCENTRATED INFLOWS TO TEMPORARY RISERS. WHEN SEDIMENT HAS ACCUMULATED TO THE CLEAN OUT ELEVATION ON ANY STAKE, THE SEDIMENT MUST BE REMOVED TO RESTORE BASIN CAPACITIES.

SEDIMENTATION BASINS AND TRAPS MUST BE PROTECTED FROM UNAUTHORIZED ACTS OF THIRD PARTIES.

ALL RISER PIPE CONNECTION SEALS SHALL BE WATERTIGHT.

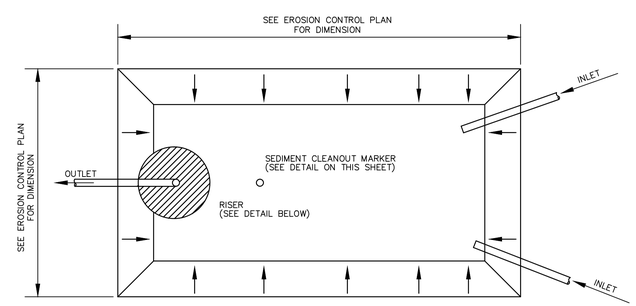

PLAN VIEW

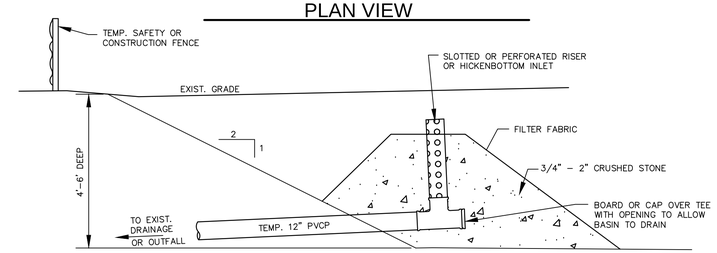

SECTION B

TEMPORARY SEDIMENT TRAP

N.T.S. BLEC-001

©2013 BL COMPANIES, INC. THESE DRAWINGS SHALL NOT BE UTILIZED BY ANY PERSON, FIRM OR CORPORATION WITHOUT THE SPECIFIC WRITTEN PERMISSION OF BL COMPANIES.

BL Companies
ARCHITECTURE
ENGINEERING
ENVIRONMENTAL
LAND SURVEYING

355 Research Parkway
Meriden, CT 06450
(203) 630-1406
(203) 630-2615 Fax

STORRS CENTER - PHASE 4

STORRS ROAD (ROUTE 195)
STORRS-MANSFIELD, CONNECTICUT

FOR PERMITTING PURPOSES ONLY
NOT FOR CONSTRUCTION

REVISIONS

No.	Date	Desc.

Designed	J.J.U.
Drawn	N.G.Y
Checked	
Approved	
Scale	AS SHOWN
Project No.	03C667-X
Date	2013.03.08
CAD File:	EC03C667X01

Title

EROSION CONTROL DETAILS

Sheet No.

EC-3

Xref (s): XR10C355002 ; XV03C667D8-PLAN ; XR10C355001 ; XR10C355003 ; XR03C667D1 ; TWA708C307901 ; XT10C355001 ; XT03C667D1 ; XV03C667D2 ; XV03C667D7 ; BG03C667X02 ; XV03C667D8-PROP.UTIL ; XR03C667X02 ; XR03C667X01 ; XC03C667X01 ; XC03C667X02

1/28/2013 3:13 PM, EDELSON, A:\JOBS01\03C667\DWG\EC03C667X01.DWG,EC-3 2 PAGE NYS.