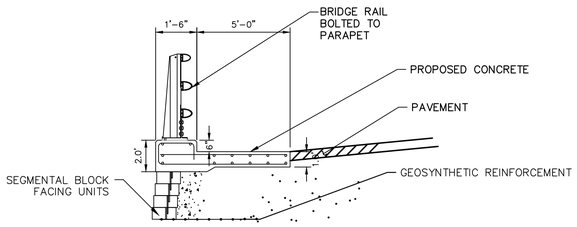

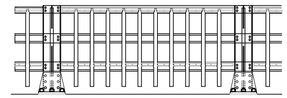

BRIDGE RAIL DETAIL

N.T.S.

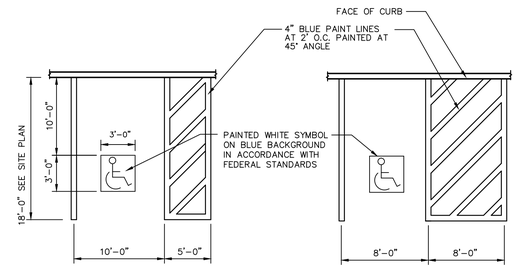

STANDARD SPACE VAN SPACE

NOTES:
1. SEE SITE PLAN FOR ACCESSIBLE SPACE LOCATIONS.
2. PROVIDE 2 COATS OF PAINT ON ALL SURFACES.

TYPICAL ACCESSIBLE PARKING SPACE AND RAMP DETAIL

N.T.S. BLPC-004

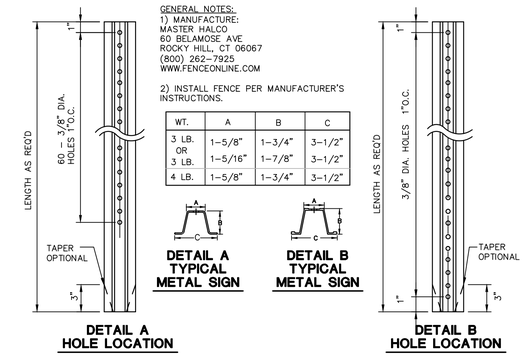

GENERAL NOTES:
1) MANUFACTURE:
MASTER HALCO
60 BELAMOSE AVE
ROCKY HILL, CT 06067
(800) 262-7925
WWW.FENCEONLINE.COM

2) INSTALL FENCE PER MANUFACTURER'S INSTRUCTIONS.

WT.	A	B	C
3 LB. OR 3 LB.	1-5/8"	1-3/4"	3-1/2"
	1-5/16"	1-7/8"	3-1/2"
4 LB.	1-5/8"	1-3/4"	3-1/2"

DETAIL A TYPICAL METAL SIGN

DETAIL B TYPICAL METAL SIGN

DETAIL A HOLE LOCATION

DETAIL B HOLE LOCATION

NOTES:
STEEL FOR POSTS SHALL CONFORM TO THE MECHANICAL REQUIREMENTS OF ASTM A 499-81 GRADE 60 AND TO THE CHEMICAL REQUIREMENTS OF ASTM A1-76 CARBON STEEL TEE RAIL HAVING NOMINAL WEIGHT OF "91 LBS OR GREATER PER LINEAR YARD.

AFTER FABRICATION ALL STEEL POSTS SHALL BE GALVANIZED TO MEET THE REQUIREMENTS OF ASTM A-123.

SIGN MOUNTING HEIGHT TO BE APPROVED BY THE ENGINEER.

ALL SIGNS IN STATE ROW TO MEET CTDOT SPECIFICATIONS FOR BREAKAWAY SIGNS. SEE CTDOT STANDARD DETAIL SHEET 'TYPICAL METAL SIGN POSTS AND SIGN MOUNTING DETAILS' AND CTDOT FORM 816

TYPICAL METAL SIGN POSTS

N.T.S. BLSD-001

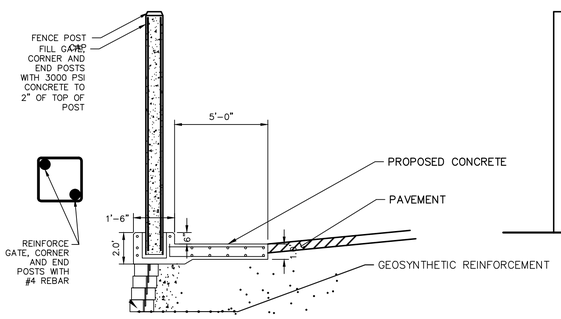

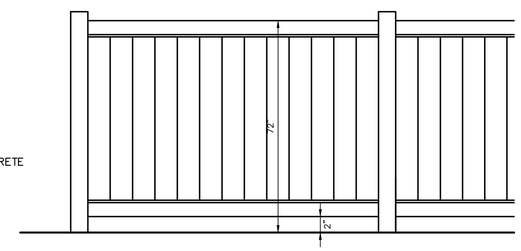

VINYL FENCE DETAIL

N.T.S.

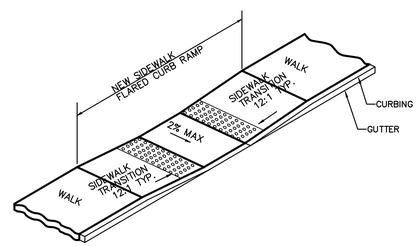

CURB RAMP AT BUILDING (MP-2) DETAIL

N.T.S.

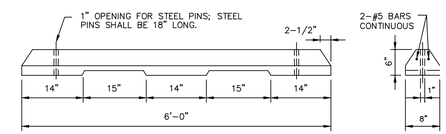

CONCRETE CURB STOP

N.T.S. BLPC-001

DESIGN NOTES

1. RETAINING WALL DESIGN ENGINEER SHALL BE GIVEN A COMPLETE SET OF APPROVED PERMITTING DRAWINGS, GEOTECHNICAL REPORT, AND VISIT THE SITE TO DETERMINE CONSTRAINTS AND DESIGN REQUIREMENTS.

2. RETAINING WALL LOCATION IS WITHIN THE PROXIMITY OF SOME OF THE PROPOSED STORMWATER MANAGEMENT SYSTEM COMPONENTS.

3. IF USED, GEOSYNTHETIC REINFORCEMENT SHALL BE DESIGNED SUCH THAT IT DOES NOT INTERFERE WITH UNDERGROUND UTILITIES OR STORMWATER SYSTEM.

GENERAL NOTES

1. STRIP ALL VEGETATION AND ORGANIC SOIL FROM THE WALL AND GRID ALIGNMENT.
2. BENCH CUT ALL EXCAVATED SLOPES.
3. DO NOT OVER EXCAVATE UNLESS DIRECTED BY SITE SOIL ENGINEER TO REMOVE UNSUITABLE SOIL.
4. GEOTECHNICAL ENGINEER SHALL VERIFY FOUNDATION SOILS AS BEING COMPETENT PER THE DESIGN STANDARDS AND PARAMETERS.
5. LEVELING PAD SHALL CONSIST OF 3/4" FOUNDATION STONE, MINIMUM 6" THICK, MINIMUM 2000 PSI CONCRETE, OR MINIMUM 6" OF 3/4" CRUSHED STONE.
6. MINIMUM EMBEDMENT OF WALL BELOW FINISH GRADE SHALL BE 24".
7. FOLLOW APPLICABLE PROVISIONS OF THE MANUFACTURERS INSTALLATION INSTRUCTIONS AND WRITTEN SPECIFICATIONS.
8. WHERE DRAIN PIPE IS USED, PROVIDE OUTLETS AS SHOWN ON WALL ELEVATIONS.
9. COMPACTION TESTS SHALL BE TAKEN AS THE WALL IS INSTALLED. THE MINIMUM NUMBER OF TESTS SHALL BE DETERMINED BY THE GEOTECHNICAL ENGINEER, OR AS INDICATED IN THE MANUFACTURERS SPECIFICATION.
10. COMPACTION SHALL BE 95% OF MAXIMUM DRY DENSITY PER AASHTO T-99.
11. GEOGRID SHALL BE PER BLOCK MANUFACTURER'S DESIGN ON SHOP DRAWINGS.
12. PULL GEOGRID TIGHT PRIOR TO BACK FILLING. LENGTH OF GEOGRID SHALL BE MEASURED FROM FRONT OF BLOCK UNITS.
13. PROVIDE LATERAL DRAINAGE SWALES TO DIRECT FLOWS AROUND THE ENDS OF THE WALL.
14. ESTABLISH TURF AS SOON AS THE WALL IS COMPLETED.
15. FINAL WALL ALIGNMENT SHALL BE LOCATED IN THE FIELD.
16. REINFORCED BACK FILL REQUIREMENTS FOR THE WALL SHALL CONFORM TO THE FOLLOWING SPECIFICATIONS:

SIEVE SIZE	PERCENT PASSING REINFORCED BACK FILL
5 INCH	100
3-1/2 INCH	90-100
1-1/2 INCH	55-95
1/4 INCH	25-60
NO. 10	15-45
NO. 40	5-25
NO. 100	0-10
NO. 200	0-5

PLASTICITY INDEX (PI) LESS THAN OR EQUAL TO 10 AND A LIQUID LIMIT LESS THAN OR EQUAL TO 40. REINFORCED BACK FILL SHALL BE PLACED AND COMPACTED IN LIFTS NOT EXCEEDING 10 INCHES. REINFORCED BACK FILL SHALL BE COMPACTED TO 95 PERCENT OF THE MAXIMUM DENSITY AS DETERMINED BY AASHTO T-99. THE MOISTURE CONTENT OF THE BACK FILL MATERIAL PRIOR TO AND DURING COMPACTION SHALL BE WITHIN 2 PERCENTAGE POINTS OF DRY OPTIMUM.

IF CONDITIONS ARE DIFFERENT THAN THOSE STATED IN THESE DRAWINGS AND SPECIFICATIONS, THE CONTRACTOR MUST CONTACT THE GEOTECHNICAL ENGINEER PRIOR TO PROCEEDING WITH THE CONSTRUCTION OF THE WALL.

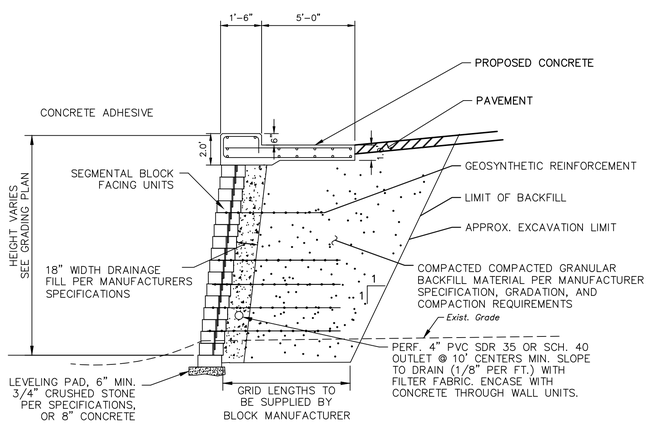

NOTE: BLOCK MANUFACTURER TO SUBMIT SHOP DRAWINGS AND DESIGN CALCULATIONS BY CT LICENSED PE FOR RETAINING WALLS PRIOR TO CONSTRUCTION

TYPICAL (MSE) RETAINING WALL/RAIL/CURB SECTION (TO BE DESIGNED BY OTHERS)

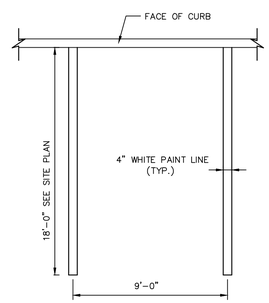

NOTE:
1. PROVIDE 2 COATS OF PAINT ON ALL SURFACES.

2. SEE PLAN FOR ACTUAL SPACE LOCATION AND DIMENSIONS.

TYPICAL PARKING SPACE DETAIL

N.T.S. BLPC-003

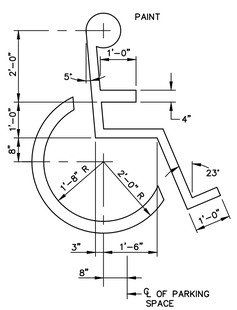

INTERNATIONAL HANDICAP SYMBOL

N.T.S. CTSR-001

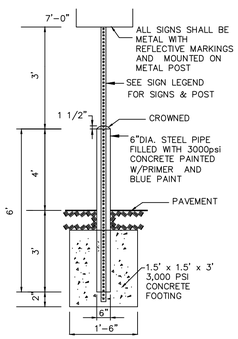

SIGN BOLLARD

NTS

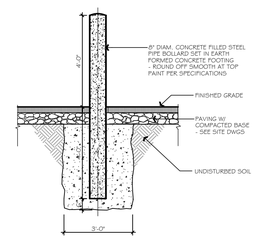

BOLLARD

NTS

©2013 BL COMPANIES, INC. THESE DRAWINGS SHALL NOT BE UTILIZED BY ANY PERSON, FIRM OR CORPORATION WITHOUT THE SPECIFIC WRITTEN PERMISSION OF BL COMPANIES.

1/28/2012 2:13 PM, CZELADNY, K:\JOBS\03\03667\DWG\DN03C667\DN03C667X01.DWG,DN-1 - 24X36 NTS.

BL Companies
ARCHITECTURE
ENGINEERING
ENVIRONMENTAL
LAND SURVEYING

355 Research Parkway
Meriden, CT 06450
(203) 630-1406
(203) 630-2615 Fax

STORRS CENTER - PHASE 4
STORRS ROAD (ROUTE 195)
STORRS-MANSFIELD, CONNECTICUT

FOR PERMITTING PURPOSES ONLY
NOT FOR CONSTRUCTION

REVISIONS
No. Date Desc.

Designed	J.J.U.
Drawn	N.G.Y
Checked	
Approved	
Scale	AS SHOWN
Project No.	03C667-X
Date	2013.03.08
CAD File:	DN03C667X01

Title
SITE DETAILS

Sheet No.
DN-1

Xref (s): : B03C667X02