LEGEND

CONTROL MEASURE	ILLUSTRATION
SILT FENCE	—SF——SF—
STOCKPILE AREA	
CONSTRUCTION ENTRANCE ANTI-TRACKING PAD	
TREE PROTECTION	S
SILT SACK INLET CATCH BASIN PROTECTION	

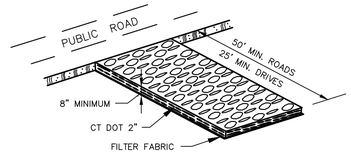

CONSTRUCTION ENTRANCE

N.T.S. CTEC-001

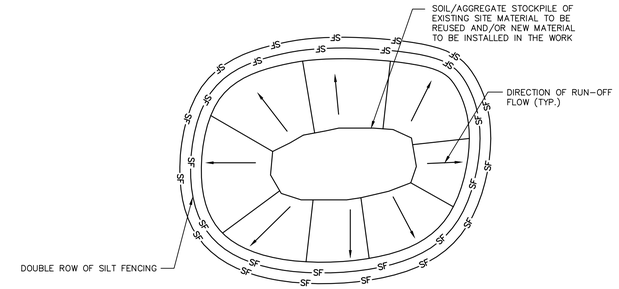

NOTES:
1. ALL EXISTING EXCAVATED MATERIAL THAT IS NOT TO BE REUSED IN THE WORK IS TO BE IMMEDIATELY REMOVED FROM THE SITE AND PROPERLY DISPOSED OF.

2. SOIL/AGGREGATE STOCKPILE SITES TO BE WHERE SHOWN ON THE DRAWINGS.

3. RESTORE STOCKPILE SITES TO PRE-EXISTING PROJECT CONDITION AND RESEED AS REQUIRED.

4. STOCKPILE HEIGHTS MUST NOT EXCEED 35'. STOCKPILE SLOPES MUST BE 2:1 OR FLATTER.

MATERIALS STOCKPILE DETAIL

N.T.S. BLEC-006

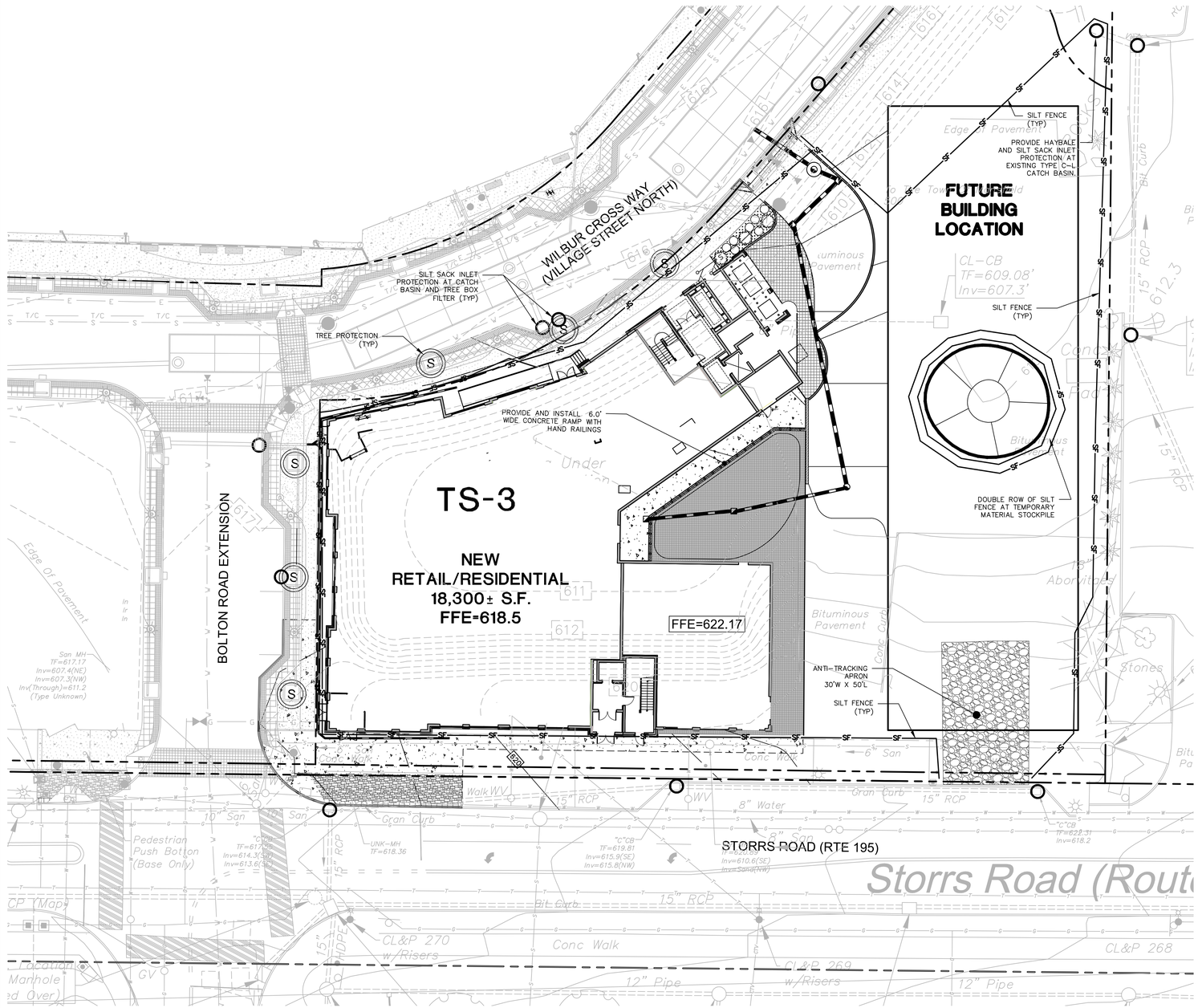

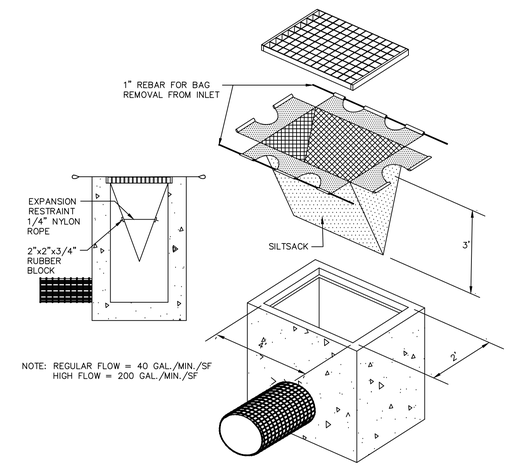

SILTSACK DETAIL

N.T.S. BLEC-005

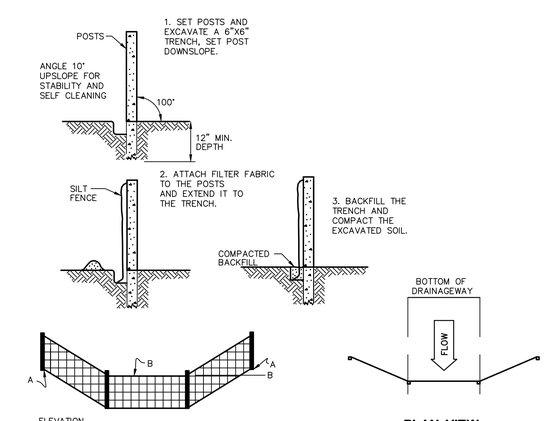

SILT FENCE

N.T.S. CTEC-003

GRAPHIC SCALE
20 10 0 20
SCALE IN FEET

©2013 BL COMPANIES, INC. THESE DRAWINGS SHALL NOT BE UTILIZED BY ANY PERSON, FIRM OR CORPORATION WITHOUT THE SPECIFIC WRITTEN PERMISSION OF BL COMPANIES.

3/14/2013, EDELANY, K:\JOBS3\03C667\DWG\EC03C667A001.DWG,EC-1 24X36 2DSC.

BL Companies
ARCHITECTURE
ENGINEERING
ENVIRONMENTAL
LAND SURVEYING

355 Research Parkway
Meriden, CT 06450
(203) 630-1406
(203) 630-2615 Fax

STORRS CENTER - PHASE 1C
STORRS ROAD (ROUTE 195)
STORRS-MANSFIELD, CONNECTICUT

PROGRESS PRINT
NOT FOR CONSTRUCTION

REVISIONS		
No.	Date	Desc.

Designed	J.J.U.
Drawn	N.G.Y.
Checked	
Approved	
Scale	1"=20'
Project No.	03C667A0
Date	03/15/2013
CAD File:	EC03C667A001

Title
EROSION CONTROL PLAN

Sheet No.
EC-1

Xref (s): ; BD03C667A001X-XX03C667-PLAN ; XA03C667G1-T3 ; CVS STORRS CT - OUTLINE PLAN ; XR10C355001 ; XR10C355003 ; XY03C667G8-PL ; XR10C355002