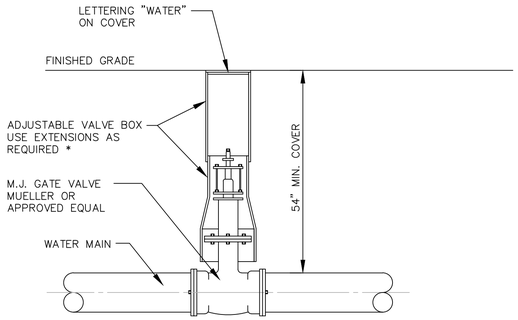

* NOTE: IF EXTENSIONS ARE NECESSARY CONTRACTOR SHALL SET "PLUMB" AND ALIGN PROPERLY FOR ACCESS TO OPERATING NUT.

TYPICAL GATE VALVE AND VALVE BOX DETAIL

N.T.S. BLWD-002

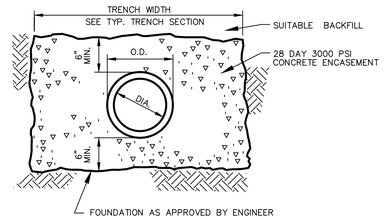

CONCRETE PROTECTION FOR PIPING

N.T.S. BLSS-011

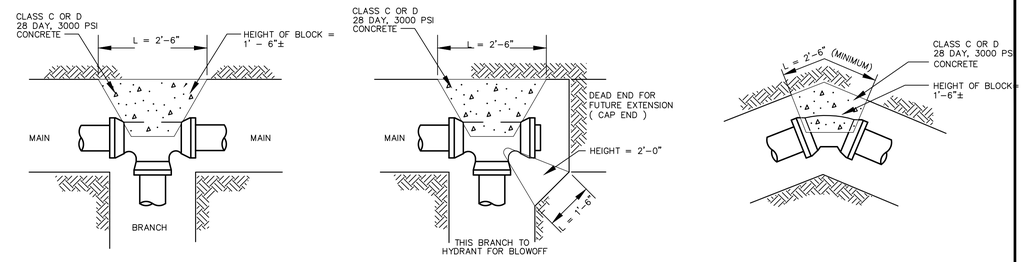

THRUST BLOCKS FOR WATER LINES

N.T.S. BLWD-001

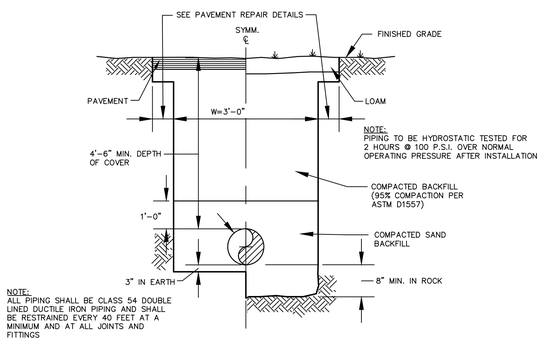

NOTE:
PIPING TO BE HYDROSTATIC TESTED FOR 2 HOURS @ 100 P.S.I. OVER NORMAL OPERATING PRESSURE AFTER INSTALLATION

NOTE:
ALL PIPING SHALL BE CLASS 54 DOUBLE LINED DUCTILE IRON PIPING AND SHALL BE RESTRAINED EVERY 40 FEET AT A MINIMUM AND AT ALL JOINTS AND FITTINGS

TYPICAL WATER MAIN AND SERVICE TRENCH DETAIL

N.T.S. BLWD-005

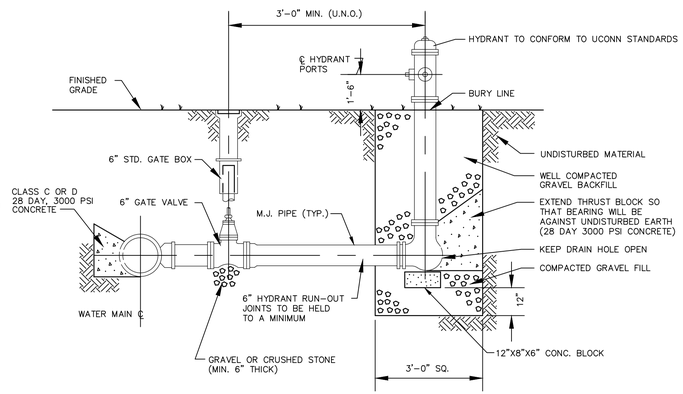

HYDRANT ASSEMBLY DETAIL WITH GATE BOX

N.T.S. BLWD-003

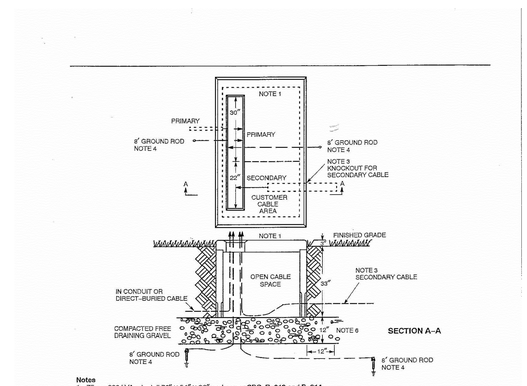

Notes

1. 75 – 300 kVA – Install 76" x 54" x 36" pad as per **SPC P-013** and **P-014**.
   500 – 2500 kVA – Install 76" x 70" X 36" pad as per **SPC P-015** and **P-016**.
2. **Primary Cable**
   a. Install direct- buried cables a minimum of 30 inches below grade.
   b. Install cables in conduit a minimum of 24 inches below grade.
   c. Loop cables in cable pit before making connections.
3. **Secondary Cable** – Leave enough cable to extend 6 feet above pad for future reconnecting to transformers with higher secondary terminals. Customer cable(s) shall enter through the rear knockout and shall be confined to the area defined as the "customer cable area."
4. **Galvanized Steel Ground Rods** – Install in trench and connect #2 copper conductors from rods through pad opening and extending 5 feet above pad. Minimum separation of ground rods is **8 feet**.
5. The following DTR/DSEM's should also be used:
   a. **DTR 17.083** – **THREE-PHASE TRANSFORMER CONNECTIONS**
   b. **DTR 33.217** – **600-VOLT CONNECTOR GUIDE - FOR NEMA PADS - THREE-PHASE PAD-MOUNT TRANSFORMERS**
   c. **DTR 42.061** – **LOCATION AND MECHANICAL PROTECTION REQUIREMENTS**
   d. **DTR 44.221** – **FAULT INDICATOR GUIDE - SOLID DIELECTRIC CABLES**
   e. **DTR 56.509** – **PRIMARY - SECONDARY AND TRANSFORMER GROUNDING**
   f. **DSEM Section 14.21** – **LOADING LIMITS – THREE-PHASE TRANSFORMERS**
   g. **DSEM Section 07.30** – **CONVENTIONAL UG LOOPS**
   h. **DTR 56.221** – **JACKETTED PRIMARY CABLE – GROUNDING**
6. The excavation for the pad shall be carried to a depth of 12 inches below the bottom of the pad. The bottom layer of backfill shall be compacted, clean gravel, free of foreign matter and construction debris, extending 12 inches beyond the circumference of the structure, and in accordance with Connecticut DOT Spec M.02.06 Grading "A"; or Massachusetts DPW Spec M1.03.0 Type b. The remaining backfill shall not contain ashes, cinders, shells, frozen material, loose debris, or stones larger than 2 inches in maximum dimension. It shall be placed in 6-inch layers and compacted with mechanical tampers to not less than 95 percent of the maximum dry density as determined by the standard compaction tests, AASHTO T180 or ASTM D698.

ORIGINAL	**INSTALLATION OF CONCRETE PAD FOR THREE-PHASE PAD-MOUNTED TRANSFORMERS 75-2500 KVA – DIRECT-BURIED**		
SCALE			
APPROVED	NORTHEAST UTILITIES	CONSTRUCTION STANDARD	**DTR 58.301** | **8**
SCALE			

TRANSFORMER PAD INSTALLATION

N.T.S.

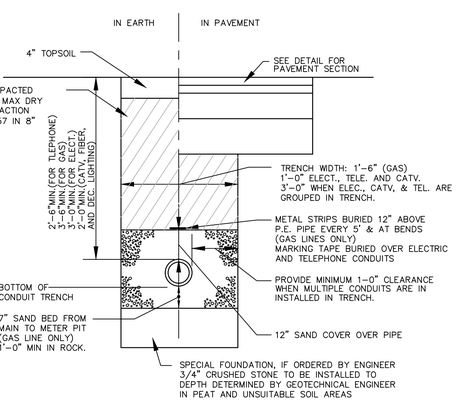

NOTE: CONCRETE ENCASE ELECTRICAL PRIMARY CONDUIT IF LESS THAN 30" OF COVER PER CL&P STANDARDS.

ELECTRICAL, CABLE, FIBER, GAS AND DECORATIVE LIGHTING CONDUIT TRENCH DETAIL

N.T.S. BLUD-001

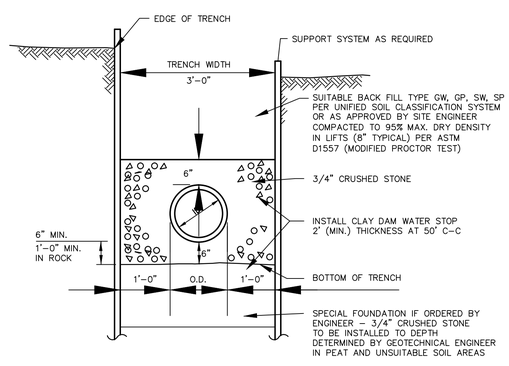

TYPICAL SANITARY SEWER TRENCH SECTION

N.T.S BLSS-010

BL Companies
ARCHITECTURE
ENGINEERING
ENVIRONMENTAL
LAND SURVEYING

355 Research Parkway
Meriden, CT 06450
(203) 630-1406
(203) 630-2615 Fax

STORRS CENTER - PHASE 1C
STORRS ROAD (ROUTE 195)
STORRS-MANSFIELD, CONNECTICUT

REVISIONS No.	Date	Desc.

PROGRESS PRINT
NOT FOR CONSTRUCTION

Designed	J.J.U.
Drawn	N.G.Y
Checked	
Approved	
Scale	AS SHOWN
Project No.	03C667A0
Date	03/15/2013
CAD File:	DN03C667A001

Title
SITE DETAILS

Sheet No.
DN-5

Xref (s): ; B003C667A001

3/14/2013, EZELADNY, K:\JOBS03\03C667\DWG\DN03C667A001.DWG:DN-5 24x36 NTS.

©2013 BL COMPANIES, INC. THESE DRAWINGS SHALL NOT BE UTILIZED BY ANY PERSON, FIRM OR CORPORATION WITHOUT THE SPECIFIC WRITTEN PERMISSION OF BL COMPANIES.